POLETRON
MADE IN ITALY
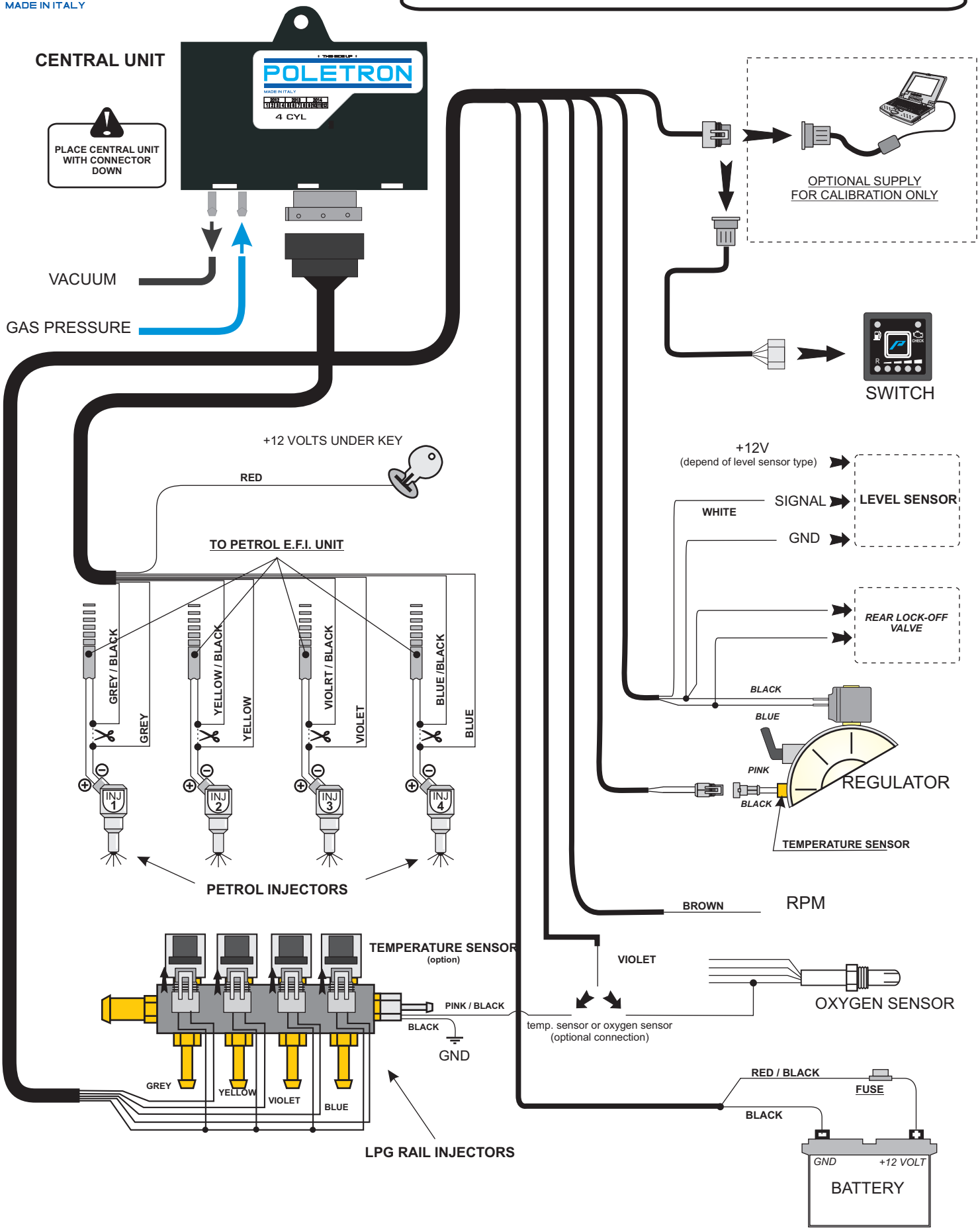
Sequential Injection System
Electric Wiring